FOR-1758 Rev.1.1

Pole	Width /W	Pitch /P	Width/F	Width/B0	Qty. per reel	Reel qty. per carton	Qty. per carton
02P	24mm	16mm	11.50mm	7.92mm	300	10	3000
03P	24mm	16mm	11.50mm	11.73mm	300	10	3000
04P	32mm	16mm	14.20mm	15.54mm	300	8	2400
05P	44mm	16mm	20.20mm	19.35mm	300	5	1500
06P	44mm	16mm	20.20mm	23.16mm	300	5	1500

未注公差/General tolerances(mm)

0 ~ 3	>3 ~ 6	>6 ~ 10	>10 ~ 18	>18 ~ 30	>30 ~ 50	>50 ~ 80	>80 ~ 120	>120 ~ 180	>180 ~ 250	>250 ~ 315	>315 ~ 400	>400 ~ 500	>500	0.1/10
±0.12	±0.18	±0.22	±0.26	±0.31	±0.37	±0.57	±0.80	±0.93	±1.05	±1.15	±1.60	±2.20	±2.50	±2°

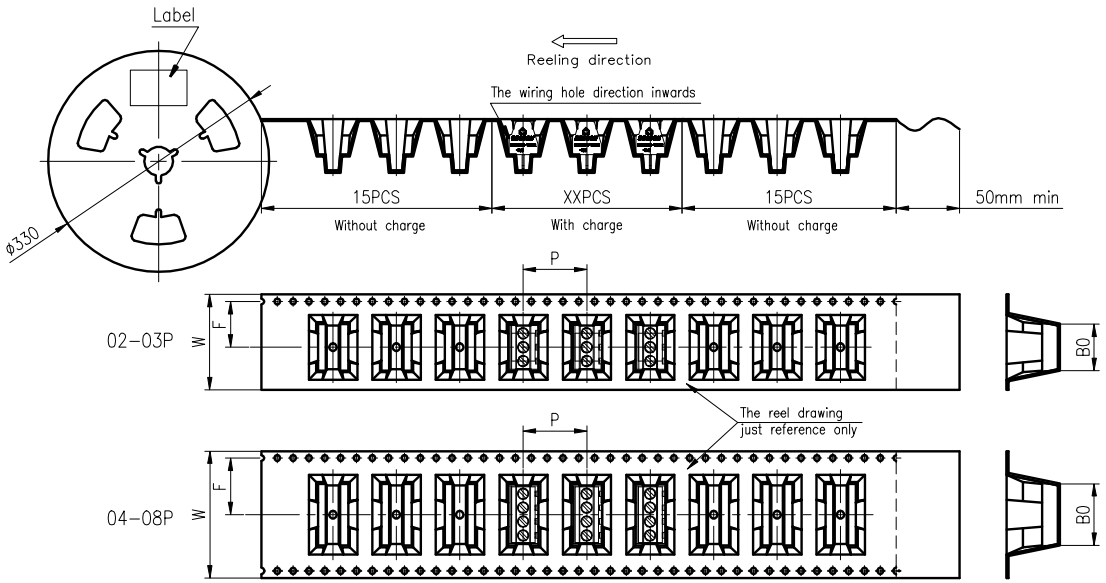

For 2P and 3P

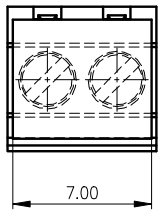

PCB LAYOUT

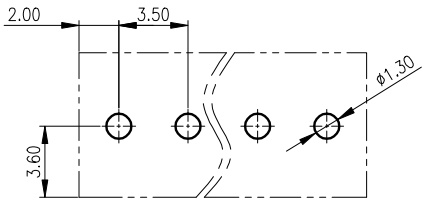

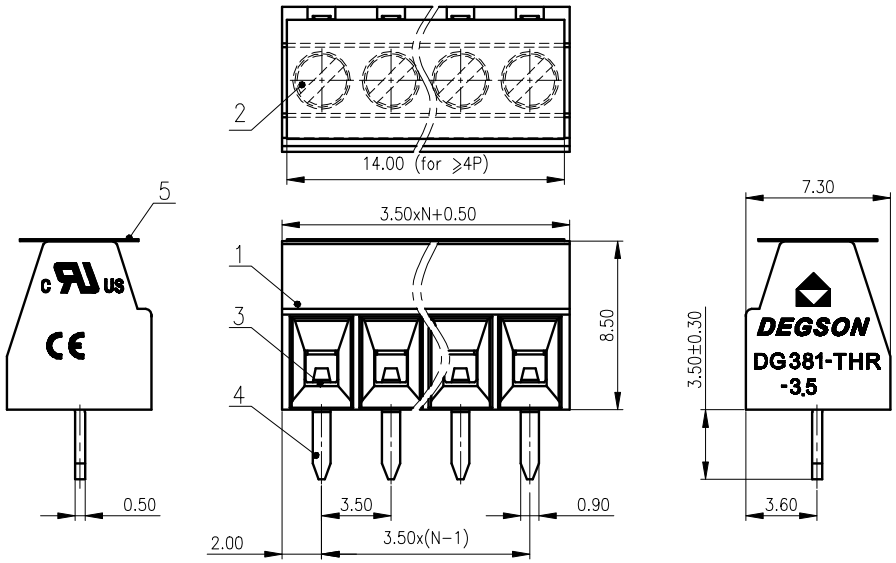

ITEM	NAME OF PART	MATERIAL	NOTES
5	Tape	Kapton	
4	Pin header	Copper alloy	Sn Plated
3	Cage	Copper alloy	M2/Ni Plated
2	Screw	Steel	M2/Zn Plated
1	Housing	Thermoplastic	UL94V-0

UL 标准/UL Standard:	B		
额定电压/电流/Rated Voltage(V)/Current(A)	150/10		
EC 标准/IEC Standard:			
过压类别/Overvoltage Category/污染等级/Pollution Degree	Ⅲ/3	Ⅲ/2	Ⅱ/2
额定电压/电流/Rated Voltage(V)/Current(A)	63/13.5	200/13.5	200/13.5
额定脉冲电压(KV)/Rate Impulse Voltage(KV)	2.5	2.5	2.5
螺丝拧矩/Torque Tightening(N·m/Lb.in)	M2, 0.2/1.77		
线径范围(刚线/软线)/Wire Range(rigid and flexible)(mm²/AWG)	0.2~1.5/30~16		
间距/Pitch(mm)/极数范围/Poles	3.81/N=02~08P		
剥线长度/Stripping length(mm)	5-6		
使用温度范围/Operating temperature(℃)	-40~+130		
符合RoHS环保要求/Conform to RoHS	Yes		

MATERIAL: /	SURFACE: /		
MAT NO.: /	宁波高松电子有限公司 NINGBO DEGSON ELECTRICAL CO., LTD		
STATUS: /			
APPD: Lan ChH 2020.05.20	NAME: DG381-THR-3.5-XXP-1Y-00A(H)		
CHKD: /			
DRFT: Yu JZh 2018.04.28	DRAWING NO.: DG381-THR-3.5-C01	REV	T0-2
SIZE: A3 mm (inch)	TYPE: CUSTOMER DRAWING	SCALE: 4:1	SHEET 1/1

REV	ECN	DESCRIPTION	DRFT	DATE